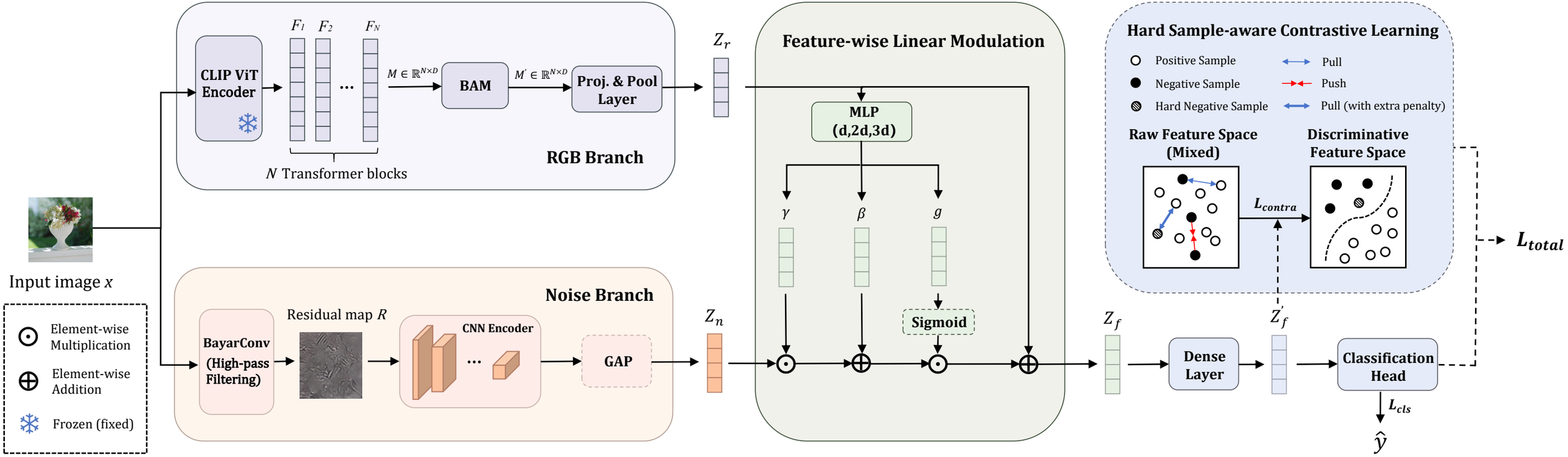
Input image x
Element-wise Multiplication
Element-wise Addition
Frozen (fixed)
CLIP ViT Encoder
F_1 F_2 F_N
N Transformer blocks
$M \in \mathbb{R}^{N\times D}$
BAM
$M' \in \mathbb{R}^{N\times D}$
Proj. & Pool Layer
RGB Branch
Z_r
Noise Branch
BayarConv (High-pass Filtering)
Residual map R
CNN Encoder
GAP
Z_n
Feature-wise Linear Modulation
MLP (d,2d,3d)
γ β g
Sigmoid
Z_f
Dense Layer
Z_f'
Classification Head
L_{cls}
$\hat{y}$
Hard Sample-aware Contrastive Learning
Positive Sample
Negative Sample
Hard Negative Sample
Pull
Push
Pull (with extra penalty)
Raw Feature Space (Mixed)
L_{contra}
Discriminative Feature Space
L_{total}